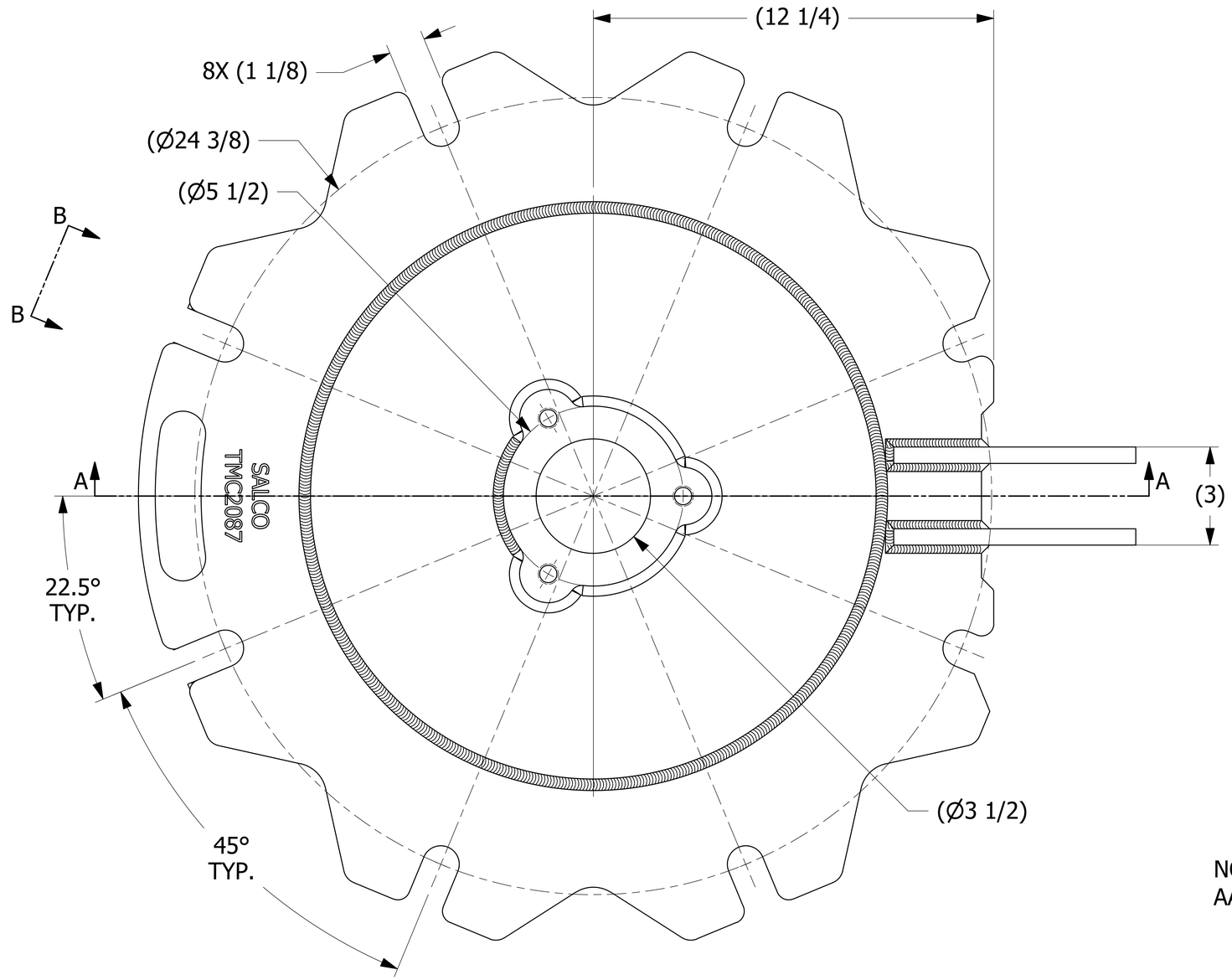

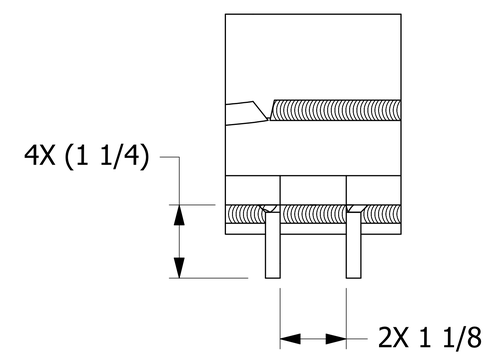

VIEW B-B
SCALE 1 : 1

NOTE:
AAR APPROVAL # E-182113.

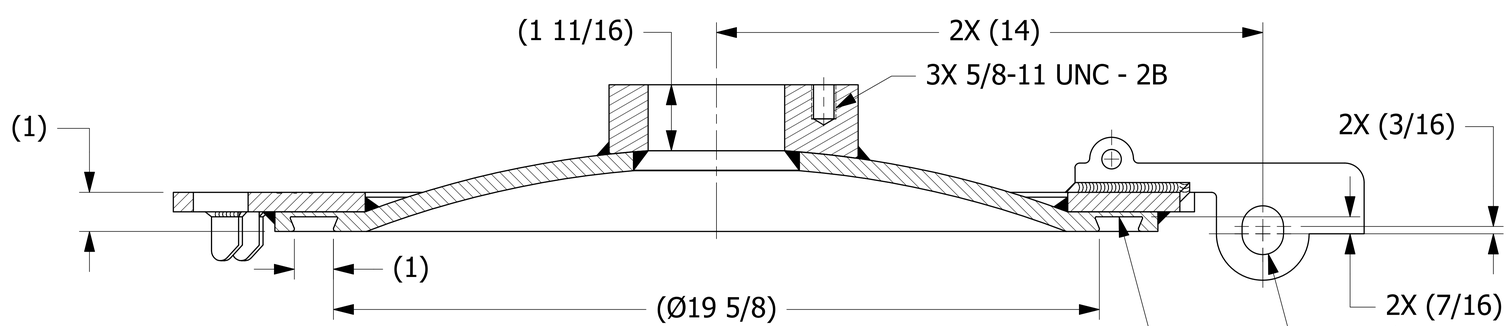

SECTION A-A

REV	BY	DATE	DESCRIPTION
N	WEB	5-16-19	REMOVED QAP4A-1 NOTE; Q-2.15.7 WAS QAP4C-1; D-008 WAS DSS 12; ADDED D-005 NOTE; AAR # WAS E-089005
M	RJP	10-5-17	HINGE WELD WAS 3/8"; UNDERSIDE WELD OF D9115 WAS 5/16"; 3.00 +.00/-.06 WAS 3.00; ADDED NOTES 6-8, (1 9/16), & 2X (3/16); ADDED "SALCO" TO ENGRAVING
L	JG	5-9-17	TMCDR2087 WAS TMCR208C1 & TMCDQIS6SF; B44637 WAS TMCHS4UT; UPDATED NOTES, VIEWS, DIMS
K	KHK	1-3-13	ADDED SECTION D. UPDATED VIEWS, BOM, DRAWING SIZE
J	JJK	4-20-12	ADDED NOTE #5 & HEAT/LOT NOTE
I	CHL	11-1-10	UPDATED NOTES, UPDATED WELD SYMBOL. ADDED PARTNUMBER TO RING SURFACE
H	CHL	5-27-08	UPDATED NOTES & ADDED VIEW C
G	AJB	5-5-06	AAR APPROVAL WAS E-989070
F	CHL	8-8-00	CHANGED DIM FROM 11.69 TO 11.96
E	CHL	2-24-00	UPDATED TO 3D
D	FOD	8-11-99	UPDATED DRAWING W/NEW HINGE
C	FOD	9-3-98	ADDED NOTCHES
B	FOD	9-3-98	CHANGED BOLT CIRCLE WAS 23.875
A	SAB	7-29-98	UPDATED SAFETY STOPS

UNLESS OTHERWISE SPECIFIED
DIMENSIONAL TOLERANCES
FRACTIONAL: ±1/16
X.XX: ±.03
X.XXX: ±.015
ANGULAR: ±1°
DEBURR ALL SHARP EDGES.
ALL MACHINED SURFACES TO HAVE A 125 RMS FINISH UNLESS NOTED OTHERWISE.
THIRD ANGLE PROJECTION

DRAWN BY:	SAB
CHECKED BY:	ACC
PROTOTYPE BY:	SAB
PROTOTYPE DATE:	11/17/1997
APPROVED FOR PRODUCTION BY:	ACC
PRODUCTION DATE:	11/17/1997

SALCO PRODUCTS, INC.

PART NAME: MANWAY COVER 20" 8-BOLT

MATERIAL: CS/316L SS

PROJECT #: 970929 | SHEET #: 1 OF 1 | SCALE: 2:3

DRAWING #: E9284 | PART #: TMC2087

THIS PRINT, PROPERTY OF SALCO PRODUCTS INC, CONTAINS PROPRIETARY INFORMATION AND MUST NOT BE COPIED, REPRODUCED, OR USED DETRIMENTALLY TO OUR INTEREST.

SALES DRAWING SALES DRAWING SALES DRAWING
SALES DRAWING SALES DRAWING SALES DRAWING